Datasheet

Ponderosa GEN4 SDR Reciever Payload

The Ponderosa Gen 4 SDR is a high performance, low noise receiver system supporting three independently tunable analog channels each with 15 MHz of instantaneous bandwidth. The RF front end includes sophisticated amplification, filtering and automatic gain adjustment stages that provide high dynamic range with high IIP3 performance. The digital stage features a high performance Zynq 7045 System on Chip FPGA that support 6 AtoD tuners that can be dynamically allocated to the analog channels and configured to support a wide range of decimation based on mission requirements. Ponderosa Gen 4 also includes a next generation high performance mRO50 Rubidium Chip Scale Atomic Clock oscillator which is disciplined with a 1pps from a GPS receiver (either bus or integrated in the payload). Finally, Ponderosa Gen 4 includes dual redundant, 256 GB Solid State Driver buffer system to store mission data between offload events.

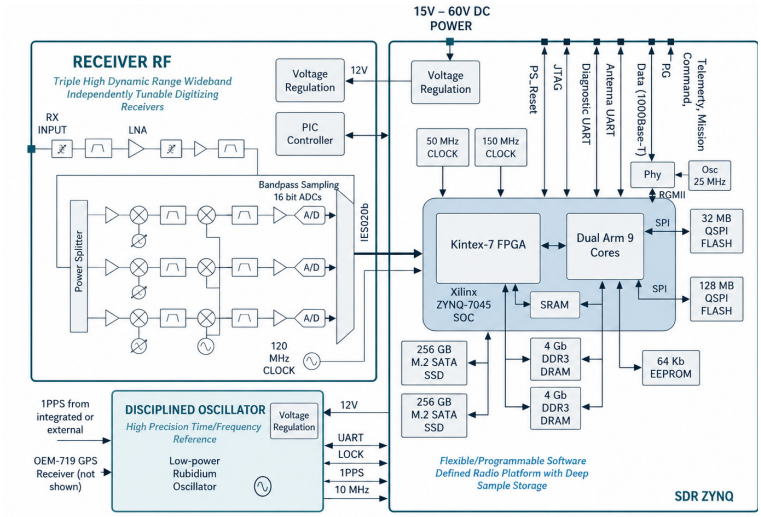

PONDEROSA SDR Receiver Block Diagram

SWaP Overview:
- Total Size: (<1U) 10.0 x 10.0 x 5.76 cm
- Total Mass: 650g, (697 g with optional integrated GPS)
- Total Power Consumption: 6.8W (Idle) 21.3W (3 RX)



PONDEROSA SDR Receiver Payload

FEATURES

- Next generation mRO50 Rubidium Chip Scale Atomic Clock which provides superior Allan Deviation to the Gen 3 CSAC at all missionrelevant durations with optimized Kalman filter for holdover operations.
- Redesigned custom low power, high performance precision frequency and time reference with integrated disciplined oscillator and optional GPS receiver.
- Fourthgeneration evolution of a flightproven space SDR wideband receiver platform optimized for high performance low Earth Orbit (LEO) CubeSat RF ISR.
- Enables RF reception and deep onboard storage of preD RF mission data and RF snippet preprocessing for onboard autonomous ISR.
- Three independent, wideband, low noise / high linearity RF receivers capable of individually tuning 138MHz—>2.5GHz.
- Xilinx Zynq 7045 digital signal processing featuring programmable subband tuning, PSD/RF activity detection, time tagging, preD data storage, and RF I/Q snippet data streaming over Ethernet.
- Industrystandard Gigabit Ethernet data interface for mission data transfer, control, and telemetry.

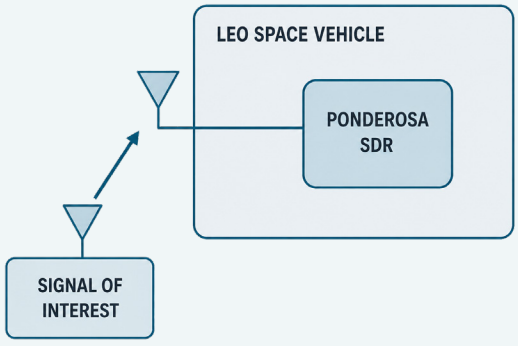

PONDEROSA SDR PAYLOAD - System Context

The information in this document is subject to change without notice. Contact Aeronix for latest details.